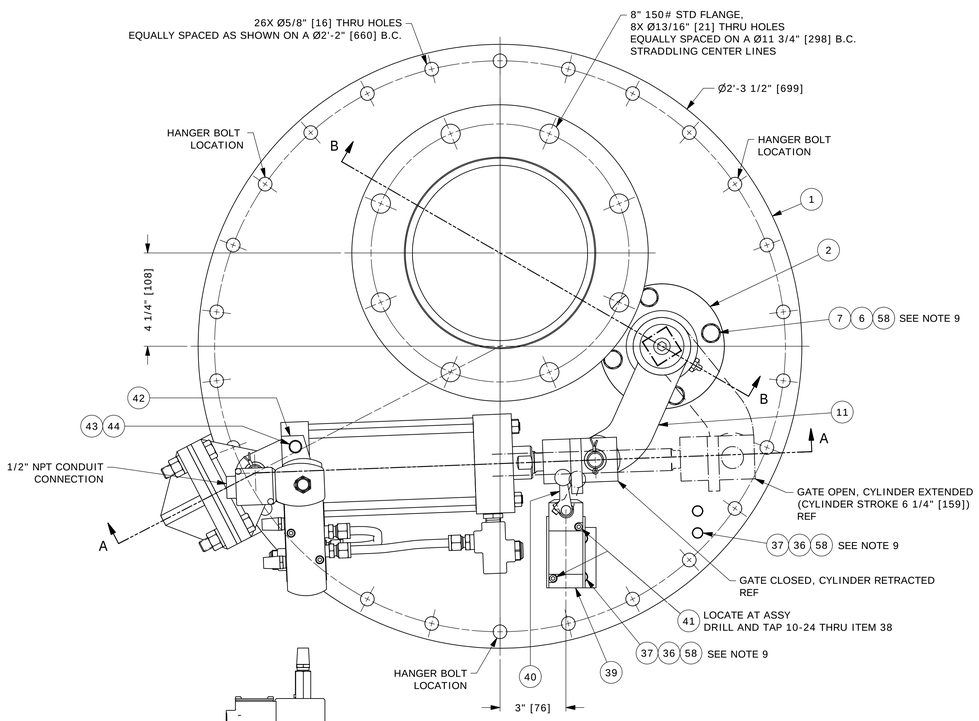

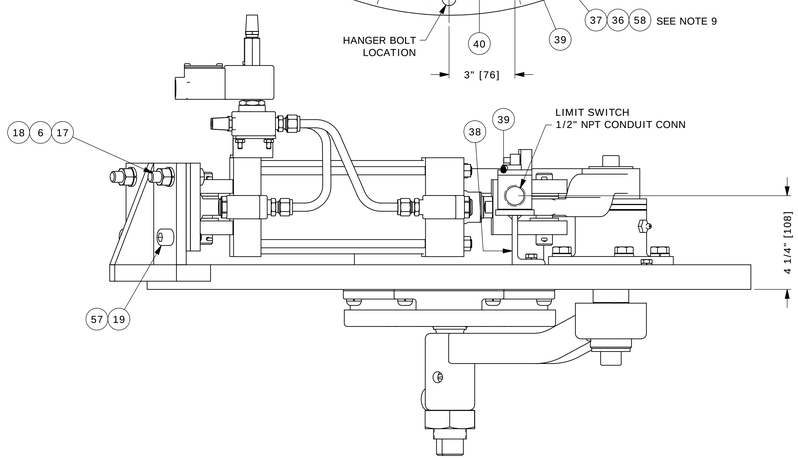

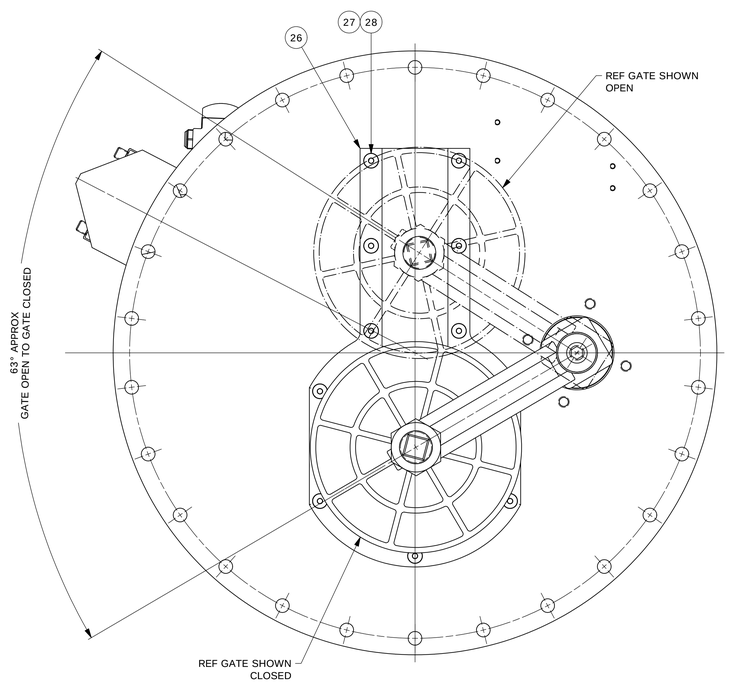

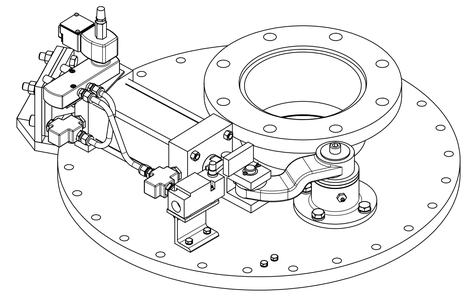

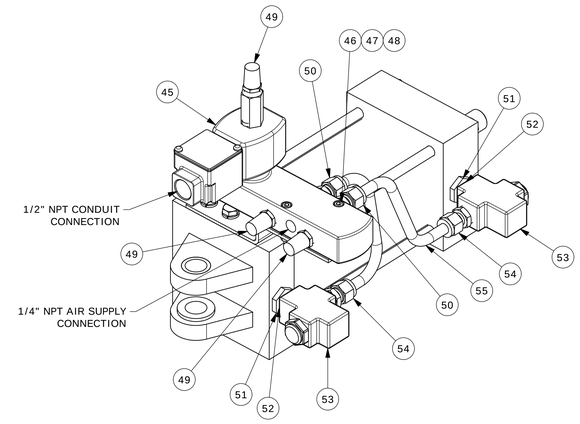

CYLINDER PIPING DETAIL
SCALE 1:2

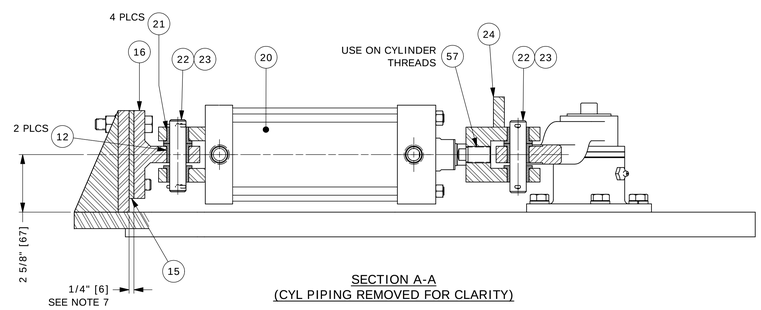

SECTION A-A
(CYL PIPING REMOVED FOR CLARITY)

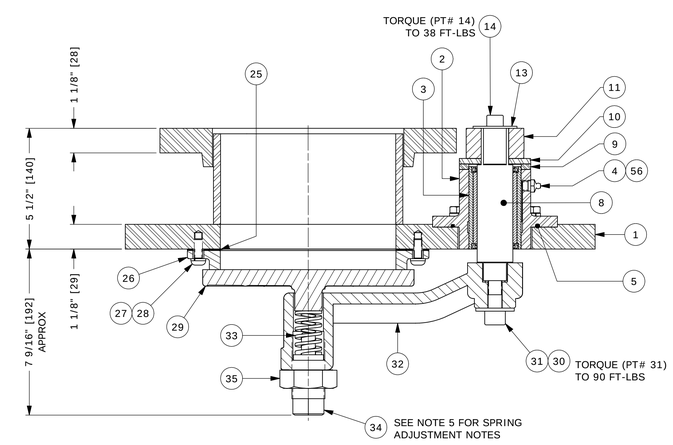

SECTION B-B

PARTS LIST			
PART No.	QTY	ITEM NUMBER	DESCRIPTION
1	1	226304	DECK PLATE WELDMENT
2	1	225368	BUSHING HOUSING
3	1	A-15657	GRAPHITAR BUSHING ASSEMBLY
4	1	101816	1/4" NPT GREASE FITTING
5	1	100529	O-RING
6	6	225817	1/2" LOCK WASHER; PLATED
7	4	226154	1/2-13 X 1 1/4 HEX HEAD CAP SCREW; PLATED
8	1	225372	GATE SHAFT
9	1	15656	THRUST BEARING, GRAPHITE
10	1	15655	CRANK ARM WASHER
11	1	14469-7	CRANK ARM
12	2	100023	BUSHING, BRONZE
13	1	15404-1	SPECIAL WASHER
14	1	102802	1/2-13 x 1" SOCKET HEAD CAP SCREW
15	1	14742	SHIM SET
16	1	14467-4	CYLINDER SUPPORT
17	2	226156	1/2-13 X 2 1/4" HEX HEAD BOLT; PLATED
18	2	225379	1/2-13 HEX NUT; PLATED
19	2	226157	1/2-13 x 1 1/2" SOCKET HEAD CAP SCREW; PLATED
20	1	219364	AIR CYLINDER
21	4	100024	BUSHING, BRONZE
22	2	14468	PIVOT PIN
23	4	100579	1/8" x 1 1/4" COTTER PIN
24	1	14470-4	CLEVIS
25	1	226168	GASKET, SEAT
SEE NOTE 8 26	1	225370	DECKPLATE SEAT
27	11	226087	3/8" LOCK WASHER; PLATED
28	11	226158	3/8-16 X 1" LG. HEX SOCKET BUTTON HD CAP SCREW; PLATED
SEE NOTE 8 29	1	19141	GATE
30	1	226159	5/8" PLAIN WASHER; PLATED
31	1	226160	5/8-18 x 2 1/2" SOCKET HEAD CAP SCREW; PLATED
32	1	19144-1	GATE ARM
33	1	109079	SPRING
34	1	19145	SPRING ADJUSTMENT SCREW
35	1	107927	1 1/2-6 JAM NUT
36	4	226093	1/4" LOCK WASHER; PLATED
37	4	226161	1/4"-20 X 7/8" HEX HEAD CAP SCREW; PLATED
38	1	225375	LIMIT SWITCH BRACKET
39	1	108981	LIMIT SWITCH
40	1	101933	LEVER, LIMIT SWITCH
41	2	226162	10-24 X 1 1/4 HEX SOCKET HEAD CAP SCREW; PLATED
42	1	15521-13	MOUNTING PLATE
43	2	226163	5/16" LOCK WASHER; PLATED
44	2	226164	5/16-18 X 3/4 HEX HEAD CAP SCREW; PLATED
45	1	225179	SOLENOID VALVE
46	2	226165	10-24 X 1 1/2 HEX SOCKET HEAD CAP SCREW; PLATED
47	2	226166	#10 LOCK WASHER; PLATED
48	2	226167	#10-24 HEX NUT; PLATED
49	3	101392	1/4" NPT MUFFLER
50	2	107324	1/4" NPT X 3/8" TUBE MALE CONNECTOR
51	2	105249	REDUCING BUSHING, 1/2 X 3/8 NPT
52	2	224817	3/8" NPT x 1" PIPE NIPPLE
53	2	225220	FLOW CONTROL VALVE, 90 DEG, 3/8NPT
54	2	107453	3/8 NPT MALE x 3/8 OD TUBE CONNECTOR, BRASS
55	1	X056-2-6	3/8" OD COPPER TUBING
56	AR	108007	MOLYKOTE III GREASE
57	AR	101383	LOCTITE SEALANT
58	AR	225863	SILICONE SEALANT

NOTES:

1. MAX. TEMPERATURE RATING: 350° F (177° C).
2. CLEAN, DRY, MOISTURE FREE AIR REQUIRED FOR CYLINDER OPERATION.
3. AIR SUPPLY AND CONDUIT CONNECTIONS TO SOLENOID MUST BE FLEXIBLE.
4. APPROX. WEIGHT: 294 LBS (133 KG)
5. SPRING ADJUSTMENT: SPRING ADJUSTMENT SCREW (PT#34) TO BE TURNED UNTIL GATE (PT# 29) CONTACTS SEAT (PT# 26). THEN GIVEN TWO (2) TURNS. TIGHTEN JAM NUT (PT# 35). FOR AN ASH HEAD HIGHER THAN 15 FT OR A PRESSURE DROP GREATER THAN 2.5 PSI, ADJUSTMENT SCREW (PT# 34) TO BE TURNED 3 TURNS AFTER GATE (PT# 29) AND SEAT (PT# 26) HAVE CONTACT. TIGHTEN JAM NUT (PT# 35). SEE NOTE 7.
6. PRESSURE DROP OF 2.5 PSI TO BE MEASURED ACROSS PRESSURE TRANSPORT LINE ORIFICE PLATE DOWNSTREAM OF EQUALIZER HEAD BRANCH, AT FREE FLOW CONDITION.
7. NOMINAL SHIM ALLOWANCE TO CENTER GATE (PT# 29) OVER VALVE SEAT (PT# 26) IN CLOSED POSITION AND HAVE GATE CLEAR SEAT OPENING (8" DIA.) IN OPEN POSITION.
8. GATE (PT# 29) AND SEAT (PT# 26) MUST HAVE RUST PROTECTIVE COATING APPLIED. DECK PLATE ASSEMBLY TO BE SHIPPED WITH GATE IN OPEN POSITION.
9. USE SEALANT (PT#58) ON THREADS OF SCREWS (PT#7 AND 37) AT ASSEMBLY.

Part Number 1 in parts list to be provided by Loibl, per details shown on A-S-H drawing # E-8056.
Parts 2 through 58 in parts list to be provided by A-S-H to Loibl for assembly.
Loibl will assemble all components for final assembly as represented on this drawing.

UNLESS OTHERWISE SPECIFIED:
FINISHED SURFACE LIMIT IS TO BE: 250
DIMENSIONAL LIMITS ON FINISHED SURFACES ARE TO BE:
FRACTIONAL: ±1/64"
DECIMAL: ±.005
ANGULAR: ±1/4°
DIMENSIONAL LIMITS ON UNFINISHED SURFACES ARE TO BE:
±1/32" ON DIM. UP TO & INCL. 12"
±1/16" ON DIM. OVER 12"
DIMENSIONS IN [ ] ARE METRIC.

REV	DATE	REV BY	CKD BY	ENG APP	REVISION RECORD

DRAWN BY	MAH	10/7/2013
CHECKED BY	CMH	10/7/2013
APPROVED BY	CMH	10/7/2013

Allen-Sherman-Hoff
a Division of Diamond Power International, Inc.
EXTON, PENNSYLVANIA, U.S.A.

© 2010 DIAMOND POWER INTERNATIONAL, INC. ALL RIGHTS RESERVED.
THIS DRAWING IS THE PROPERTY OF DIAMOND POWER INTERNATIONAL, INC. (DPI) AND ITS USE IS GOVERNED BY THE TERMS AND CONDITIONS OF THE CONTRACT FOR WHICH IT WAS CREATED. DPI GRANTS A NON-EXCLUSIVE LICENSE TO USE, REPRODUCE AND DISTRIBUTE THIS DRAWING SOLEY FOR THE MAINTENANCE, REPAIR AND OPERATION, AND FOR SOLICITING BIDS FOR THE ERECTION OF, THE EQUIPMENT DISCLOSED HEREIN.

DECK PLATE ASSEMBLY
STYLE V

LOW TEMPERATURE, FOR 20 PSI PRESSURE SERVICE
1 1/8" THICK, NO EQUALIZER CONNECTION
A516 GRADE 70 NORMALIZED DECK PLATE AND 24V DC SOLENOID

ITEM No.: A-224912-4

PROJECT: STD
DWG NO: E-8057
REV:
SCALE: 3:8
SHEET 1 OF 1

A-2297