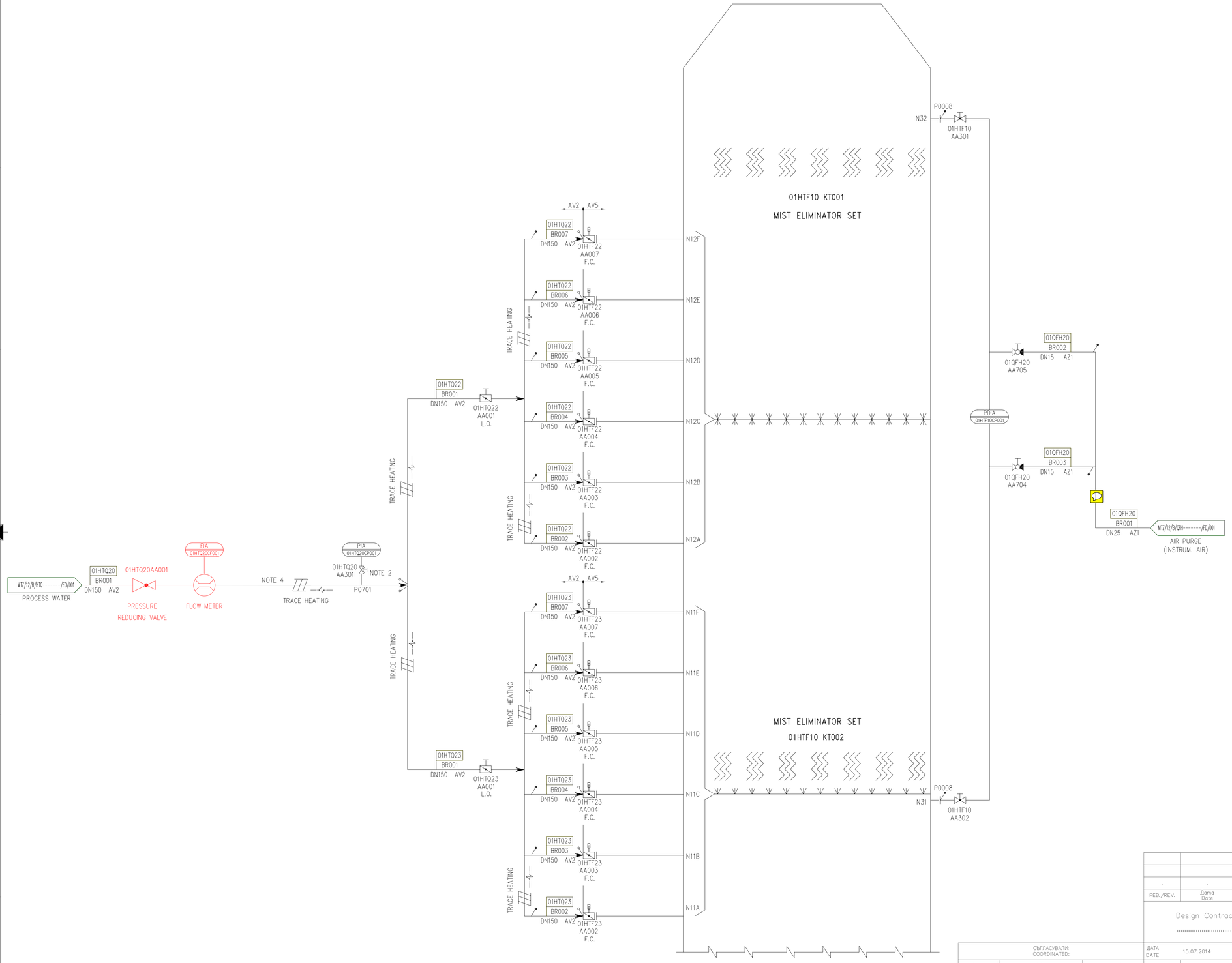

NOTES :

1) FOR DIAGRAM SYMBOLS REFER TO P&I "SYMBOL LEGEND" DOC.N° MTZ/00/B/HTQ-------/FD/001.
2) PRESSURE INSTRUMENT IS LOCATED AT UPPER SEPARATOR LEVEL.
3) AUTOMATIC ON-OFF VALVES ARE PROVIDED WITH LIMIT SWITCHES, AS SHOWN IN THE - SYMBOL LEGEND - DRAWING
4) HEAT TRACING TO BE PROVIDED FOR OUTDOOR INSTALLATION

РЕВ./REV.	Дата Date	Начертал Drawn by	Проверил Checked by	Одобрил Released	Изменения Details of Revision
.	.	.	.	.	.

Design Contract No:
.....

ЕЙ И ЕС 3С ТЕЦ МАРИЦА ИЗТОК 1
AES 3C MARITZA EAST 1 TPP

AES Galabovo
we are the energy

СЪГЛАСУВАЛИ: COORDINATED:			ДАТА DATE	15.07.2014	
ОТДЕЛ DEPARTMENT	ИМЕ NAME	ПОДПИС SIGNATURE		ИМЕ NAME	ПОДПИС SIGNATURE
MP	DIMO BAHOV		НАЧЕРТАЛ DRAWN BY	ROSEN PETROV	
BOP	PETYA DIMITROVA		ПРОВЕРИЛ CHECKED BY	NIKOLAY MITEV	
MH	PETAR T PETROV		ОДОБРИЛ RELEASED	M. GERENOVA	
MNT	ZHEKO ARABOV		ЗАМЕНЯ REPLACES	MTZ/01/B/HTF----V22/FD/001	
EL	IVAN M IVANOV		МАЩАБ SCALE	N/A	НОМЕР НА ДОКУМЕНТА DOCUMENT NUMBER
ENG	MARIANA GERENOVA		ФОРМАТ FORMAT	A1	KKS НА СИСТЕМАТА SYSTEM KKS CODE

ИМЕ НА ПРОЕКТА / PROJECT NAME

ЗАГЛАВИЕ НА ЧЕРТЕЖА / TITLE OF THE DRAWING

ТЕХНОЛОГИЧНА СХЕМА СИСТЕМА КАПКОУЛОВИТЕЛИ СОИ БЛОК 1
P&I DIAGRAM MIST ELIMINATOR WASH FGD UNIT 1

№ НА ИЗПЪЛНИТЕЛЯ: SUPPLIER No.:

ME1-FGD-DRW-01-HTF-TE-0169

HTF

THIRD ANGLE PROJECTION

ВСИЧКО ЛИСТА №: NUMBER OF SHEETS:	1	ЛИСТ №: SHEET №:	1
ЧАСТ: ТЕХНОЛОГИЧНА PART: TECHNOLOGICAL		РЕВ: REV:	00

Правата върху този документ и информацията в него са запазени. Размножаването, използването или разпространяването на трети страни без специални пълномощия е строго забранено
We reserve all rights in this document and in the information contained therein. Reproduction, use or disclosure to third parties without express authority is strictly forbidden.

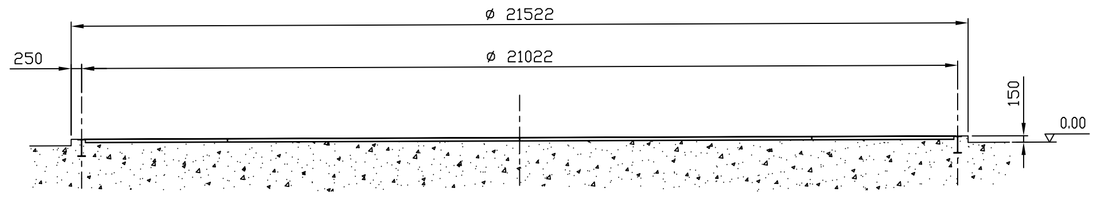

SECTION "Z-Z"

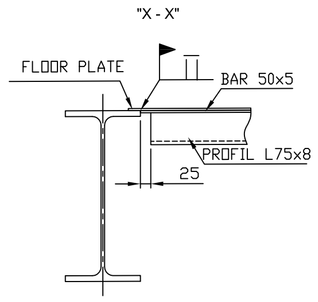

GENERAL NOTES:

- FOR GENERAL NOTES SEE DRAWING MTZ/01/B/UVC05-----/EA/001
- FLOOR PLATE TO BE RUBBER LINED

REFERENCE DRAWING:

MTZ/02/B/HTF-------/SW/751	ABSORBER VIEWS
MTZ/02/B/HTF-------/SW/761	SHELL DETAILS
MTZ/12/B/HTF-------/SW/662	FLUSH CLEANOUT DOOR

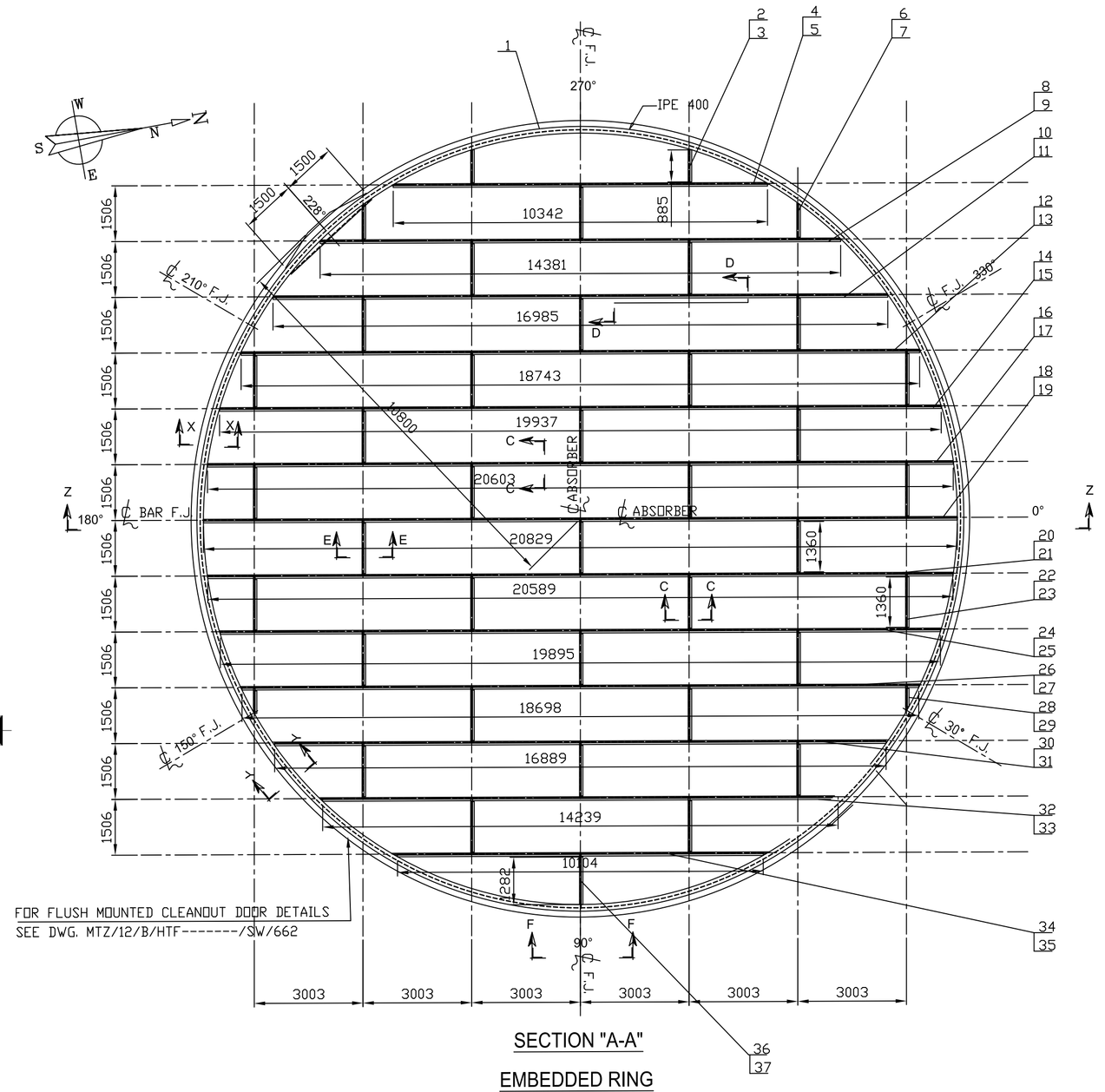

SECTION "A-A"

EMBEDDED RING

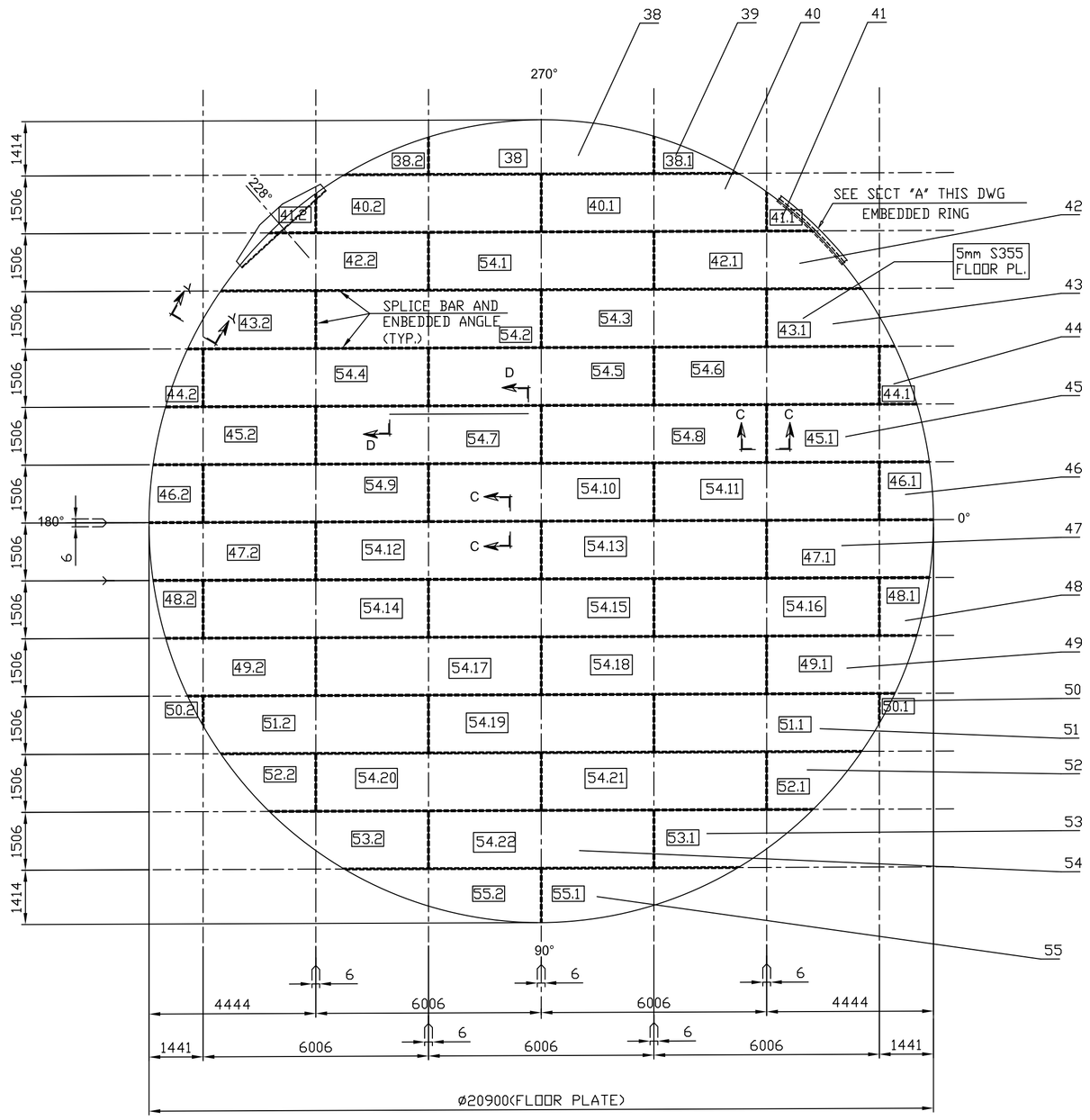

SECTION "B-B"

FLOOR PLATE PLAN

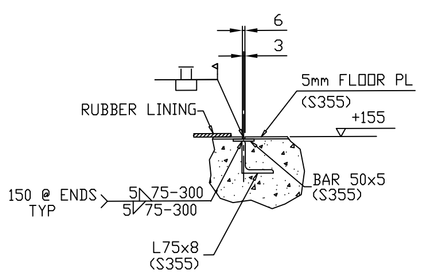

SECTION "C-C"

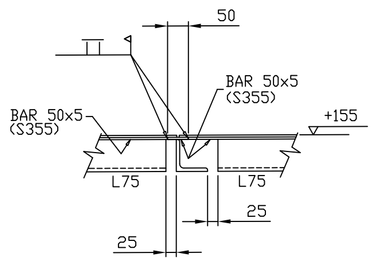

SECTION "D-D"

TYP FIELD JOINT
AT INTERSECTIONS

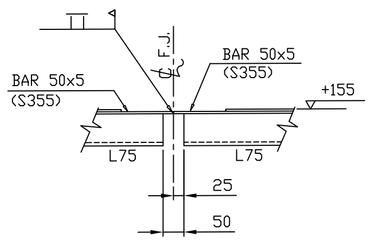

SECTION "E-E"

TYP FIELD JOINT
FOR BAR 50
(FABRICATOR TO
DETERMINE FIELD
JOINT LOCATIONS)

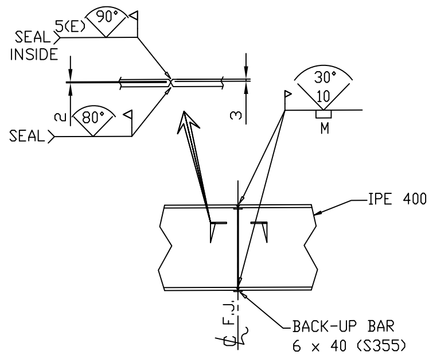

VIEW "F"

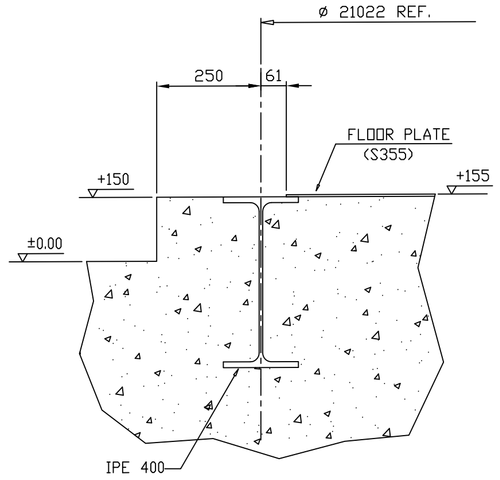

SECTION "Y-Y"

POS.	DESCRIPTION	NAME	PCS	Unit WEIGHT (kg)	Total WEIGHT (kg)	MATERIAL	NOTE
		TOTAL – 20956kg					
55.	PLATE	MTZ/12/B/HTF-------/SW/557	2	196	392	S355 J2	
54.	PLATE	MTZ/12/B/HTF-------/SW/557	22	353	7772	S355 J2	
53.	PLATE	MTZ/12/B/HTF-------/SW/557	2	196	392	S355 J2	
52.	PLATE	MTZ/12/B/HTF-------/SW/557	2	111	222	S355 J2	
51.	PLATE	MTZ/12/B/HTF-------/SW/557	2	347	694	S355 J2	
50.	PLATE	MTZ/12/B/HTF-------/SW/557	2	7	14	S355 J2	
49.	PLATE	MTZ/12/B/HTF-------/SW/557	2	220	440	S355 J2	
48.	PLATE	MTZ/12/B/HTF-------/SW/557	2	70	140	S355 J2	
47.	PLATE	MTZ/12/B/HTF-------/SW/557	2	259	518	S355 J2	
46.	PLATE	MTZ/12/B/HTF-------/SW/557	2	82	164	S355 J2	
45.	PLATE	MTZ/12/B/HTF-------/SW/557	2	247	494	S355 J2	
44.	PLATE	MTZ/12/B/HTF-------/SW/557	2	43	86	S355 J2	
43.	PLATE	MTZ/12/B/HTF-------/SW/557	2	175	350	S355 J2	
42.	PLATE	MTZ/12/B/HTF-------/SW/557	2	288	576	S355 J2	
41.	PLATE	MTZ/12/B/HTF-------/SW/557	2	27	54	S355 J2	
40.	PLATE	MTZ/12/B/HTF-------/SW/557	2	347	694	S355 J2	
39.	PLATE	MTZ/12/B/HTF-------/SW/557	2	47	94	S355 J2	
38.	PLATE	MTZ/12/B/HTF-------/SW/557	1	298	298	S355 J2	
37.	BAR	50x5,L=1368mm	1	3	3	S355 J2	
36.	PROFILE	L75x8,L=1280mm	1	12	12	S355 J2	
35.	BAR	50x5,L=10450mm	1	21	21	S355 J2	
34.	PROFILE	L75x8,L=10104mm	1	91	91	S355 J2	
33.	BAR	50x5,L=14250mm	1	28	28	S355 J2	
32.	PROFILE	L75x8,L=14240mm	1	126	126	S355 J2	
31.	BAR	50x5,L=17040mm	1	33	33	S355 J2	
30.	PROFILE	L75x8,L=16889mm	1	151	151	S355 J2	
29.	BAR	50x5,L=730mm	2	1.5	3	S355 J2	
28.	PROFILE	L75x8,L=605mm	2	5.5	11	S355 J2	
27.	BAR	50x5,L=18800mm	1	37	37	S355 J2	
26.	PROFILE	L75x8,L=18698mm	1	168	168	S355 J2	
25.	BAR	50x5,L=19954mm	1	39	39	S355 J2	
24.	PROFILE	L75x8,L=19895mm	1	179	179	S355 J2	
23.	BAR	50x5,L=1460mm	34	3	102	S355 J2	
22.	PROFILE	L75x8,L=1360mm	34	12	416	S355 J2	
21.	BAR	50x5,L=20630mm	1	41	41	S355 J2	
20.	PROFILE	L75x8,L=20589mm	1	186	186	S355 J2	
19.	BAR	50x5,L=20850mm	1	41	41	S355 J2	
18.	PROFILE	L75x8,L=20829mm	1	187	187	S355 J2	
17.	BAR	50x5,L=20620mm	1	41	41	S355 J2	
16.	PROFILE	L75x8,L=20603mm	1	186	186	S355 J2	
15	BAR	50x5,L=19970mm	1	39	39	S355 J2	
14.	PROFILE	L75x8,L=19937mm	1	179	179	S355 J2	
13.	BAR	50x5,L=18800mm	1	37	37	S355 J2	
12.	PROFILE	L75x8,L=18743mm	1	169	169	S355 J2	
11.	BAR	50x5,L=17040mm	1	33	33	S355 J2	
10.	PROFILE	L75x8,L=16985mm	1	153	153	S355 J2	
9.	BAR	50x5,L=14433mm	1	29	29	S355 J2	
8.	PROFILE	L75x8,L=14381mm	1	129	129	S355 J2	
7.	BAR	50x5,L=980mm	2	2	4	S355 J2	
6.	PROFILE	L75x8,L=980mm	2	9	18	S355 J2	
5.	BAR	50x5,L=10460mm	1	21	21	S355 J2	
4.	PROFILE	L75x8,L=10342mm	1	93	93	S355 J2	
3.	BAR	50x5, L=930mm	2	2	4	S355 J2	
2.	PROFILE	L75x8, L=885mm	2	8	16	S355 J2	
1.	RING	MTZ/02/B/HTF--------SW/756	1	4534	4534	S355 J2	

Rev.	Revision Date	Created by	Checked by	Approved by	Description	Status
0	25/03/09	LONGONI	TONINELLI	SPREAFICO	RELEASED FOR CONSTRUCTION	RFC

Project
Проект

Maritza East I Power Station

Company
Възложителя

ALSTOM Power Italia S.p.A.
SIGNED BY: DATE: 25/03/09
REV. 0 AND FURTHER RELEASED FOR ERECTION/CONSTRUCTION

Space for stamp of Municipality of Galabovo
Място за печат на Община Гълъбово

Space for further stamps
Място за допълнителни печати

Area for stamp of EQE Control OOD (ICS)
Място за печат на EQE Control OOД (Незав. надзор)

Space for stamp of authorized Bulgarian Designer
Място за печат на лицензиран български проектант

Main Contractor / Главен изпълнител
ALSTOM
Power Generation AG
Power Boiler GmbH

Partner of Main Contractor / Партньор на главния изпълнител
ALSTOM
Power Italia S.p.A.

Responsible dept. Отговорен отдел: STRUCTURAL	Created by Изготвил: LONGONI	Checked by Проверил: TONINELLI	Approved by Одобрил: SPREAFICO	Format Формат: A1
Scale Мащаб: 1:100 1:10		Class. no. (e.g. KKS) Класифик. №: HTF	for Company Review & Approval : За одобрение от Възложителя : NO	
Derived from Произтича от	Replaces Замяна	Doc. Type Тип на документа: SW	Document Status Статус на документа: RELEASED	Sub Site No. Подобект №

Logo of Legal Owner
Официален собственик
ALSTOM
Power Italia S.p.A.

Sub Contractors Doc Number
№ на документа на подизпълнителя

Consortium Partner Document Code
Код на документа на партньора от консорциума

Title, Subtitle
Заглавие, подзаглавие
ABSORBER 2
FLOOR PLATE AND EMBEDDED RING

Project Doc Number
№ на проектния документ
MTZ/02/B/HTF-------/SW/755

Rev. Рев	Date Дата	Lang. Език	Sheet Страница
0	25/03/2009	EN	1/1

We reserve all rights in this document and in the information contained therein. Reproduction, use or disclosure to third parties without express authority is strictly forbidden. Правата върху този документ и информацията в него са запазени. Размножаването, използването или разпространяването на трети страни без специално пълномощия е строго забранено

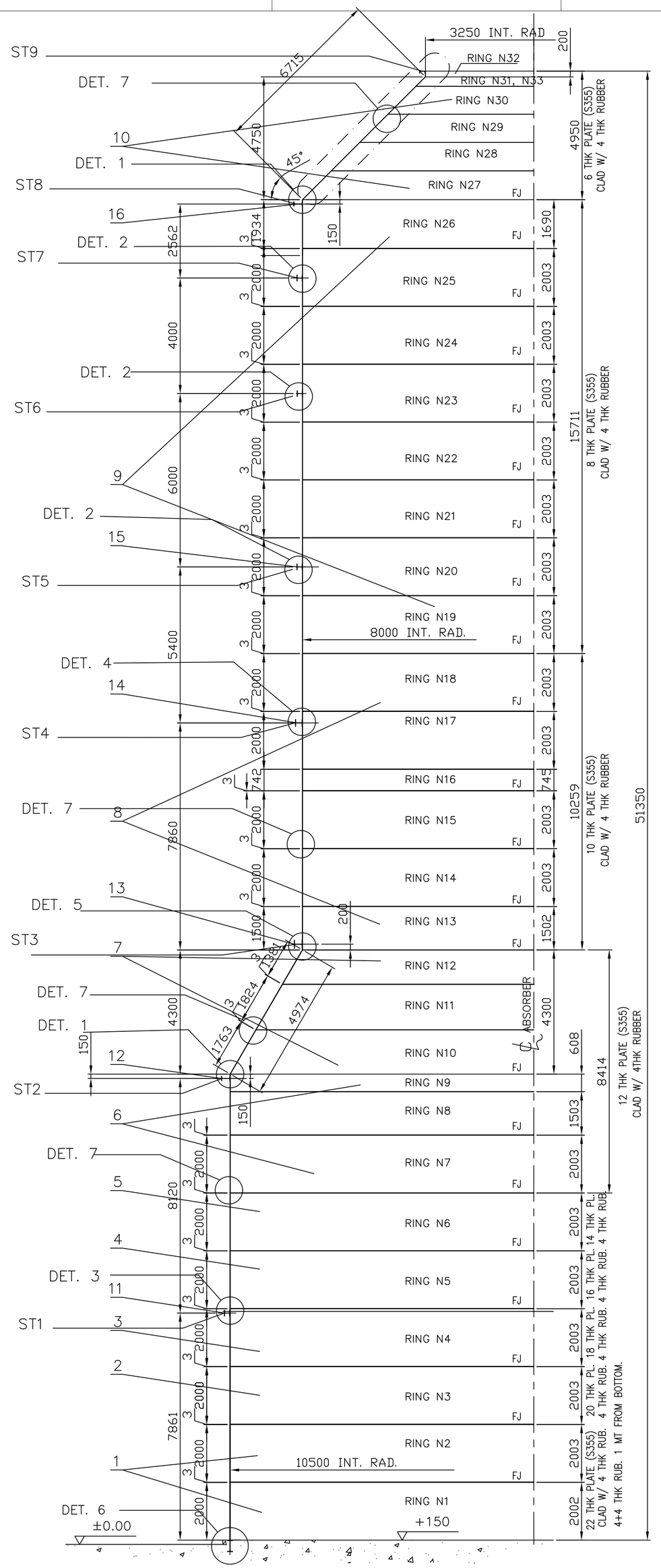

DETAIL 1 - ST2, ST8
M 1:10

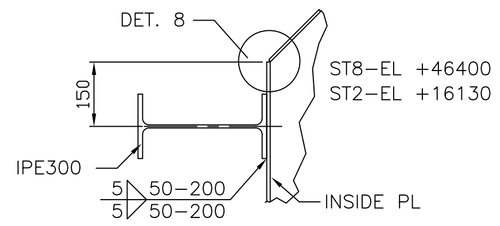

DETAIL 2 - ST5, ST6, ST7
M 1:10

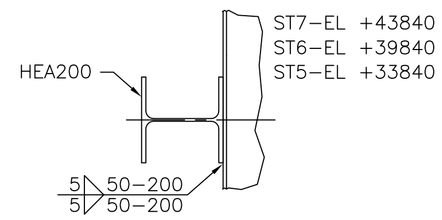

DETAIL 3 - ST1
M 1:10

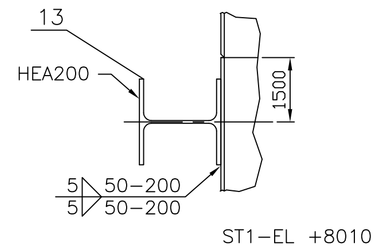

DETAIL 4 - ST4
M 1:10

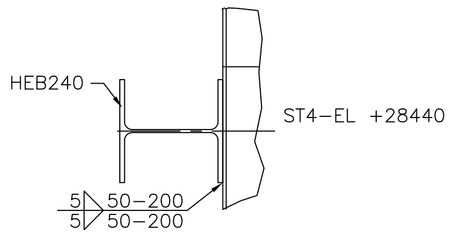

DETAIL 5 - ST3
M 1:10

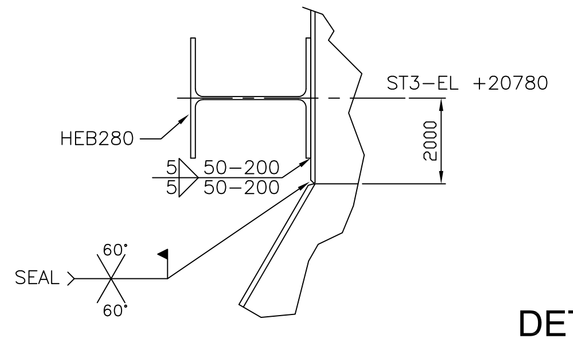

DETAIL 6

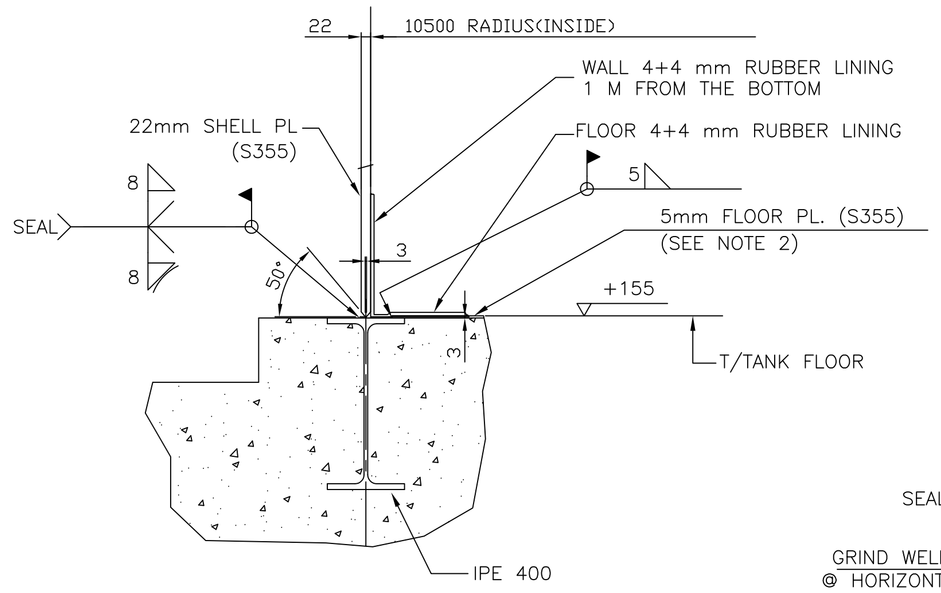

DETAIL 8

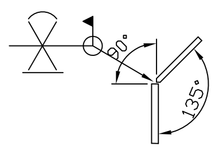

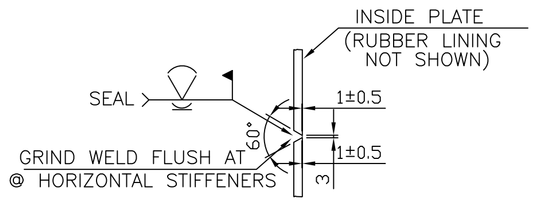

TYPICAL VERTICAL FIELD
SPLICE FOR SHELL PLATE
THICKNESS 12 mm – RING 10,11,12

DETAIL 7
M 1:20

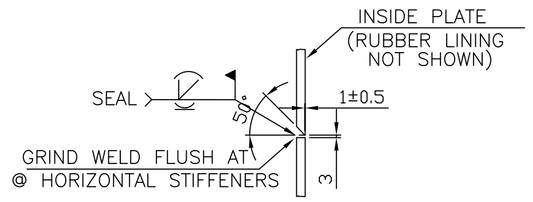

TYPICAL CIRCUMFERENTIAL FIELD
SPLICE FOR SHELL PLATE
THICKNESS 5–10mm

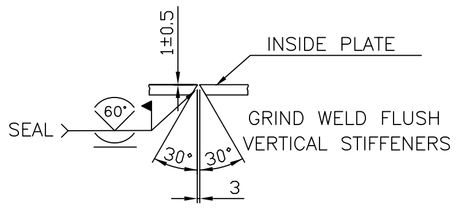

TYPICAL VERTICAL FIELD
SPLICE FOR SHELL PLATE
THICKNESS 5–10mm

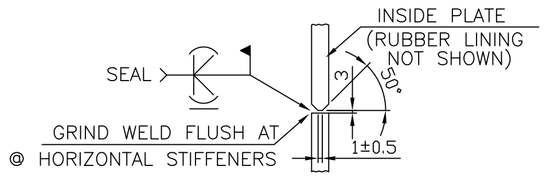

TYPICAL CIRCUMFERENTIAL FIELD
SPLICE FOR SHELL PLATE
THICKNESS 12–22 mm

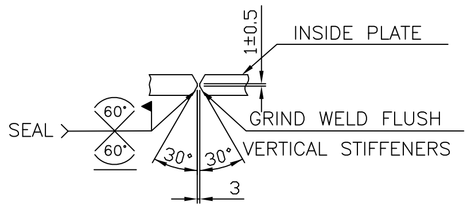

TYPICAL VERTICAL FIELD
SPLICE FOR SHELL PLATE
THICKNESS 12–22mm

GENERAL NOTES:

1 – FOR GENERAL NOTES SEE DRAWING MTZ/02/B/UVC05-----/EA/001
2 – FLOOR PLATE TO BE RUBBER LINED
3 – THIS DRAWING WAS DEVELOPED ON MTZ/12/B/UVC05-----/DD/001 DRAWING

REFERENCE DRAWING:

MTZ/02/B/HTF-------/SW/751 ABSORBER VIEWS
MTZ/01/B/UVC05-----/DD/001 FLOOR PLATE AND EMBEDDED RING
MTZ/12/B/HTD-----W10/DD/001 ABSORBER OUTLET TRANSITION
MTZ/12/B/HTD-----W10/DD/002 ABSORBER OUTLET TRANSITION DETAILS

POS.	DESCRIPTION	NAME	PCS	WEIGHT (kg) Unit	WEIGHT (kg) Total	MATERIAL	NOTE
16.	MTZ/12/B/HTF-------/SW/576	RING ST8 IPE300	1	2173	2173		
15.	MTZ/02/B/HTF-------/SW/775	RING ST5 ST6 ST7 HEA200	1	6537	6537		
14.	MTZ/12/B/HTF-------/SW/574	RING ST4 HEB240	1	4263	4263		
13.	MTZ/12/B/HTF-------/SW/573	RING ST3 HEB280	1	5290	5290		
12.	MTZ/12/B/HTF-------/SW/572	RING ST2 IPE300	1	2827	2827		
11.	MTZ/12/B/HTF-------/SW/571	RING ST1 HEA200	1	2892	2892		
10.	MTZ/12/B/HTF-------/SW/681	OUTLET TRANSITION	1	13217	13217		
9.	MTZ/02/B/HTF-------/SW/770	RING N 19,20,21,22,23,24,25,26	1	49547	49547		
8.	MTZ/02/B/HTF-------/SW/769	RING N 13,14,15,16,17,18	1	40427	40427		
7.	MTZ/12/B/HTF-------/SW/568	RING N 10,11,12	1	27384	27384		
6.	MTZ/02/B/HTF-------/SW/767	RING N7,8,9	1	25538	25538		
5.	MTZ/02/B/HTF-------/SW/766	RING N6	1	14511	14511		
4.	MTZ/02/B/HTF-------/SW/765	RING N5	1	16583	16583		
3.	MTZ/02/B/HTF-------/SW/764	RING N4	1	18655	18655		
2.	MTZ/02/B/HTF-------/SW/763	RING N3	1	20728	20728		
1.	MTZ/02/B/HTF-------/SW/762	RING N1, N2	1	45618	45618		

Rev.	Revision Date	Created by	Checked by	Approved by	Description	Status
0	18/02/09	LONGONI	TONINELLI	SPREAFICO	RELEASED FOR CONSTRUCTION	RFC

Project / Проект: Maritza East I Power Station

Company / Възложителя: AES

Space for stamp of Municipality of Galabovo / Място за печат на Община Гълъбово

Space for further stamps / Място за допълнителни печати

Area for stamp of EQE Control OOD (ICS) / Място за печат на EQE Control ООД (Незав. надзор)

Space for stamp of authorized Bulgarian Designer / Място за печат на лицензиран български проектант

Main Contractor / Главен изпълнител: ALSTOM — Power Generation AG, Power Boiler GmbH

Partner of Main Contractor / Партньор на главния изпълнител: ALSTOM — Power Italia S.p.A.

Responsible dept. / Отговорен отдел: STRUCTURAL	Created by / Изготвил: LONGONI	Checked by / Проверил: TONINELLI	Approved by / Одобрил: SPREAFICO	Format / Формат: A1
Scale / Мащаб: 1:100, 1:10		Class. no. (e.g. KKS) / Класифик. №: HTF	for Company Review & Approval : / За одобрение от Възложителя :	
Derived from / Произтича от	Replaces / Заменя	Doc. Type / Тип на документа: SW	Document Status / Статус на документа: RELEASED	Sub Site No. / Подобект №:
Logo of Legal Owner / Официален собственик: ALSTOM Power Italia S.p.A.	Sub Contractors Doc Number / № на документа на подизпълнителя		Consortium Partner Document Code / Код на документа на партньора от консорциума	
	Title, Subtitle / Заглавие, подзаглавие: ABSORBER 2 SHELL DETAILS		Project Doc Number / № на проектния документ: MTZ/02/B/HTF--------/SW/761	
			Rev. / Рев: 0; Date / Дата: 18/02/09; Lang. / Език: EN; Sheet / Страница: 1/1	

We reserve all rights in this document and in the information contained therein. Reproduction, use or disclosure to third parties without express authority is strictly forbidden. Правата върху този документ и информацията в него са запазени. Размножаването, използването или разпространяването на трети страни без специални пълномощия е строго забранено

Deviations of sizes for which tolerances are not indicated (DIN 13920) regarding length, outside inside dimensions, size (strengthening, width, sloped bulges) and weld partsweld values and closed structures..											
Accuracy class	Nominal range of sizes (mm)										
	to 30	30 to 120	120 to 315	315 to 1000	1000 to 2000	2000 to 4000	4000 to 8000	8000 to 12000	12000 to 16000	16000 to 20000	over 20000
B	±1	±2	±2	±3	±4	±6	±8	±10	±12	±14	±16

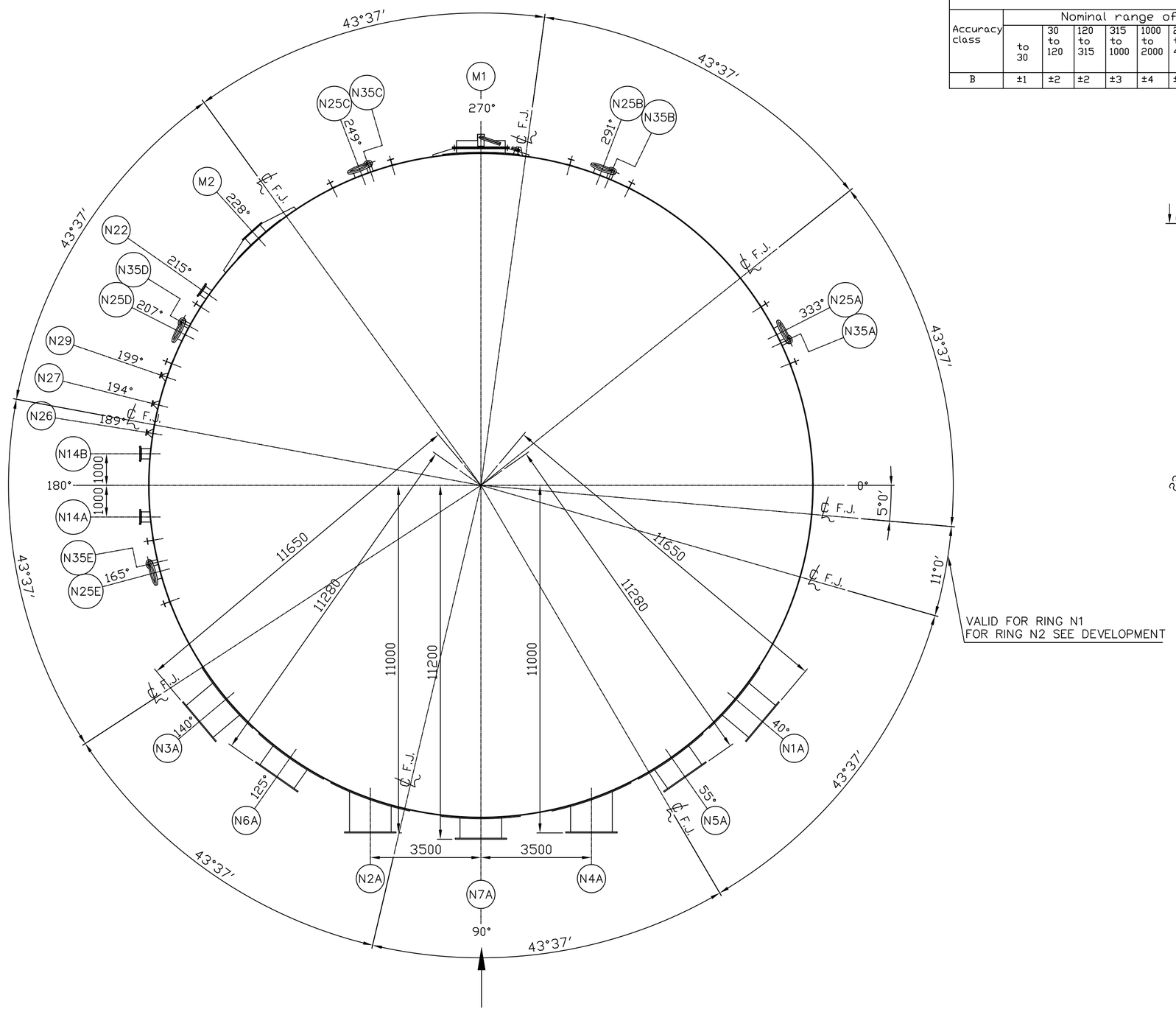

DETAIL RING 1, RING 2
M1:50

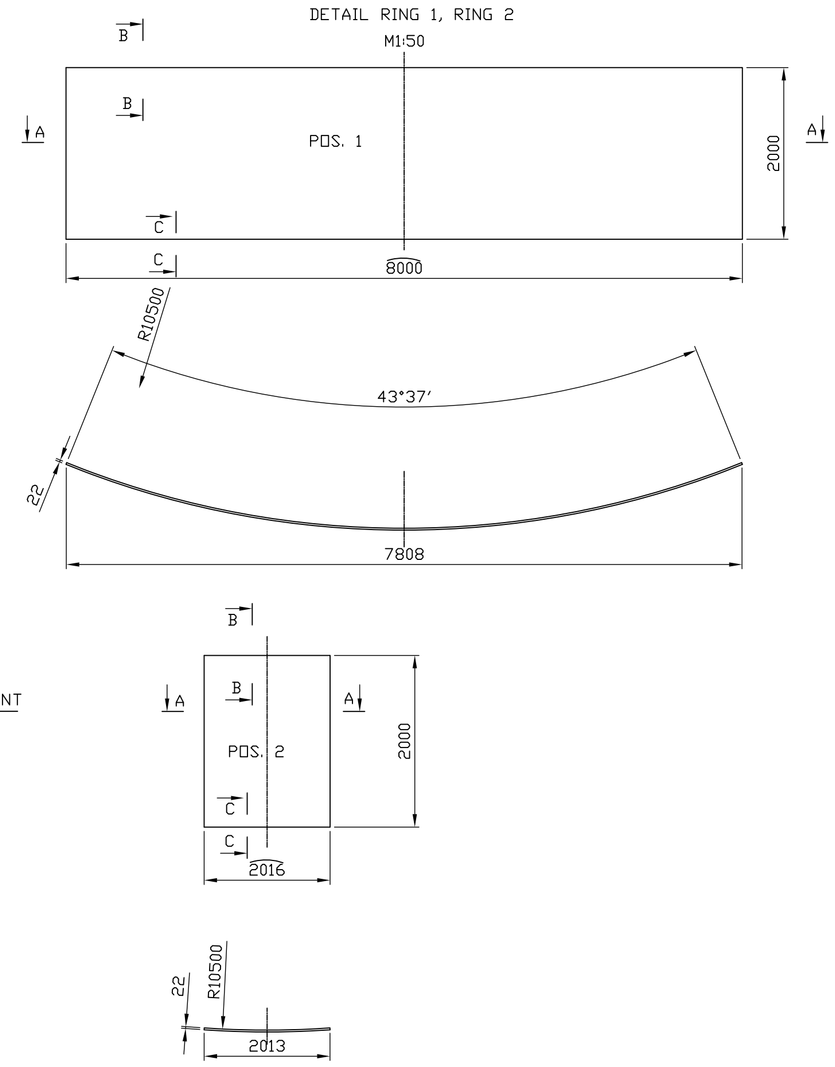

VIEW "A"

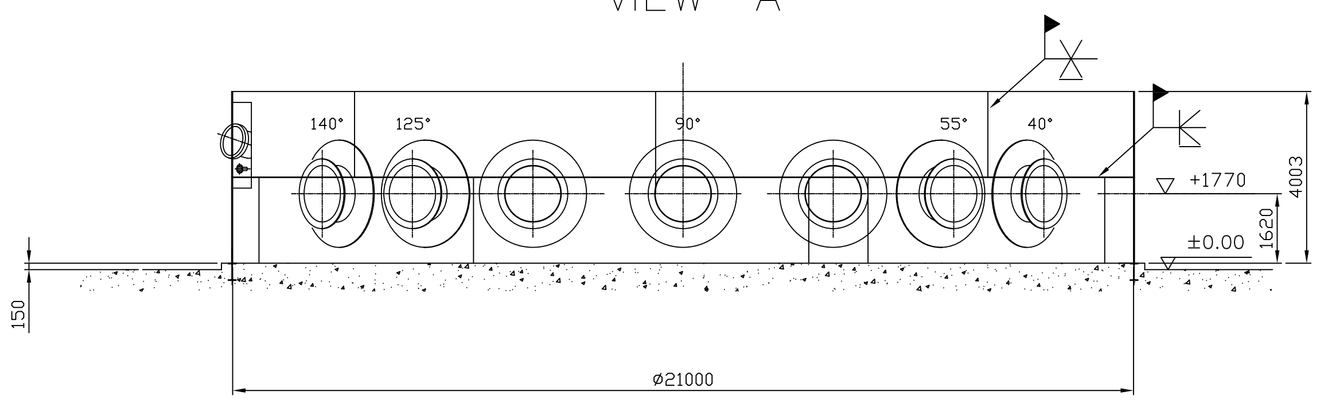

DEVELOPMENT
M1:250

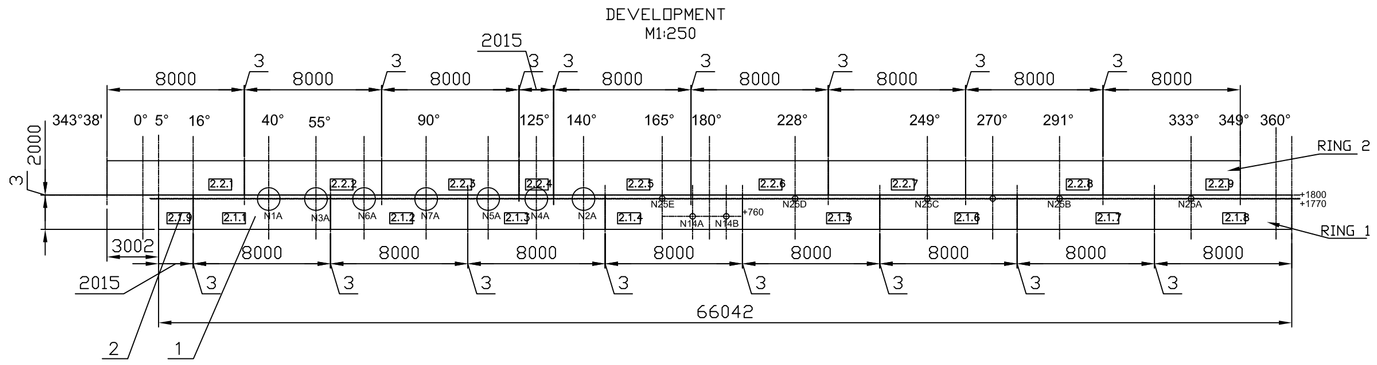

M1:10

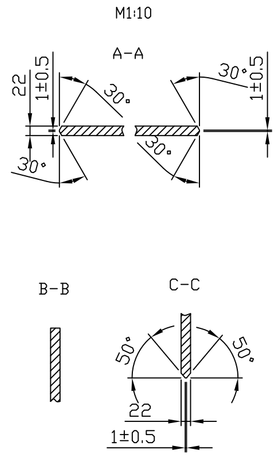

TECHNICAL NOTES:

1. Sharp edges shall be cleaned of mechanical processing residuals
2. Surfaces shall be cleaned to SA2,5 prior to applying protection
3. Anti corrosion coat:
   - Internal: primer DIMATCOTE 210 – 25µm
   - External: primer DIMATCOTE 9 – 75µm
4. Free dimensions tolerances according to DIN 13920
5. Deviation tolerances of blank forms according to MMR MTZ/12/B/HT/_____/ET/003, ATTACHMENTS
6. Internal surfaces shall be processed for rubber lining as per standard DIN 28053 and DIN 28051

REFERENCE DRAWING:

MTZ/02/B/HTF-------/SW/761

TOTAL - 45618 kg

POS.	DESCRIPTION	NAME	PCS	WEIGHT (kg) Unit	WEIGHT (kg) Total	MATERIAL	NOTE
2.	PLATE	2016/2000/22	2	697	1394	S355 J2	
1.	PLATE	8000/2000/22	16	2764	44224	S355 J2	

Rev.	Revision Date	Created by	Checked by	Approved by	Description	Status
0	18/02/09	LONGONI	TONINELLI	SPREAFICO	RELEASED FOR CONSTRUCTION	RFC

Project / Проект: Maritza East I Power Station

Company / Възложителя: AES

Space for stamp of Municipality of Galabovo / Място за печат на Община Гълъбово

Space for further stamps / Място за допълнителни печати

Area for stamp of EQE Control OOD (ICS) / Място за печат на EQE Control OOД (Незав. надзор)

Space for stamp of authorized Bulgarian Designer / Място за печат на лицензиран български проектант

Main Contractor / Главен изпълнител: ALSTOM Power Generation AG, Power Boiler GmbH

Partner of Main Contractor / Партньор на главния изпълнител: ALSTOM Power Italia S.p.A.

Responsible dept. / Отговорен отдел	Created by / Изготвил	Checked by / Проверил	Approved by / Одобрил	Format / Формат
STRUCTURAL	LONGONI	TONINELLI	SPREAFICO	A1
Scale / Мащаб: 1:100		Class. no. (e.g. KKS) / Класифик. ?: HTF	for Company Review & Approval : / За одобрение от Възложителя :	
Derived from / Произтича от	Replaces / Заменя	Doc. Type / Тип на документа: SW	Document Status / Статус на документа	Sub Site No. / Подобект ?

Logo of Legal Owner / Официален собственик: ALSTOM Power Italia S.p.A.

Sub Contractors Doc Number / ? на документа на подизпълнителя

Consortium Partner Document Code / Код на документа на партньора от консорциум

Title, Subtitle / Заглавие, подзаглавие: ABSORBER 2 RING N1, N2

Project Doc Number / ? на проектния документ: MTZ/02/B/HTF-------/SW/762

Rev. / Реф	Date / Дата	Lang. / Език	Sheet / Страница
0	18/02/09	EN	1/1

We reserve all rights in this document and in the information contained therein. Reproduction, use or disclosure to third parties without express authority is strictly forbidden. Правата върху този документ и информацията в него са запазени. Размножаването, използването или разпространяването на трети страни без специални пълномощия е строго забранено

Deviations of sizes for which tolerances are not indicated (DIN 13920) regarding lenght, outside inside dimensions, size (strengthening, width, sloped bulges) and weld partsweld values and closed structures..

Accuracy class	Nominal range of sizes (mm)										
	to 30	30 to 120	120 to 315	315 to 1000	1000 to 2000	2000 to 4000	4000 to 8000	8000 to 12000	12000 to 16000	16000 to 20000	over 20000
B	±1	±2	±2	±3	±4	±6	±8	±10	±12	±14	±16

TECHNICAL NOTES:

1. Surfaces shall be cleaned to SA2,5 prior to applying protection
2. Anti corrosion coat:
- Internal: primer DIMATCOTE 210 - 25µm
- External: primer DIMATCOTE 9 - 75µm

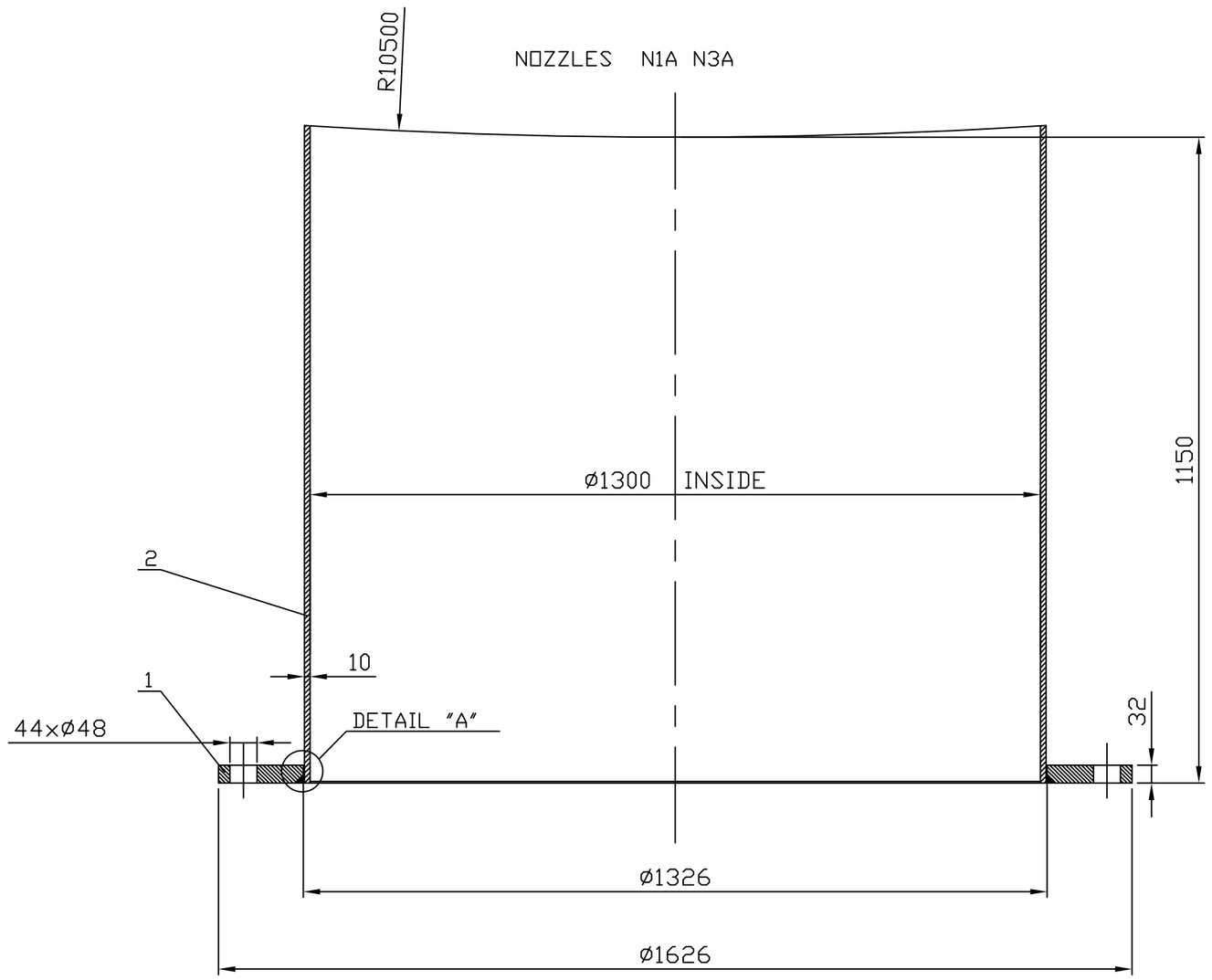

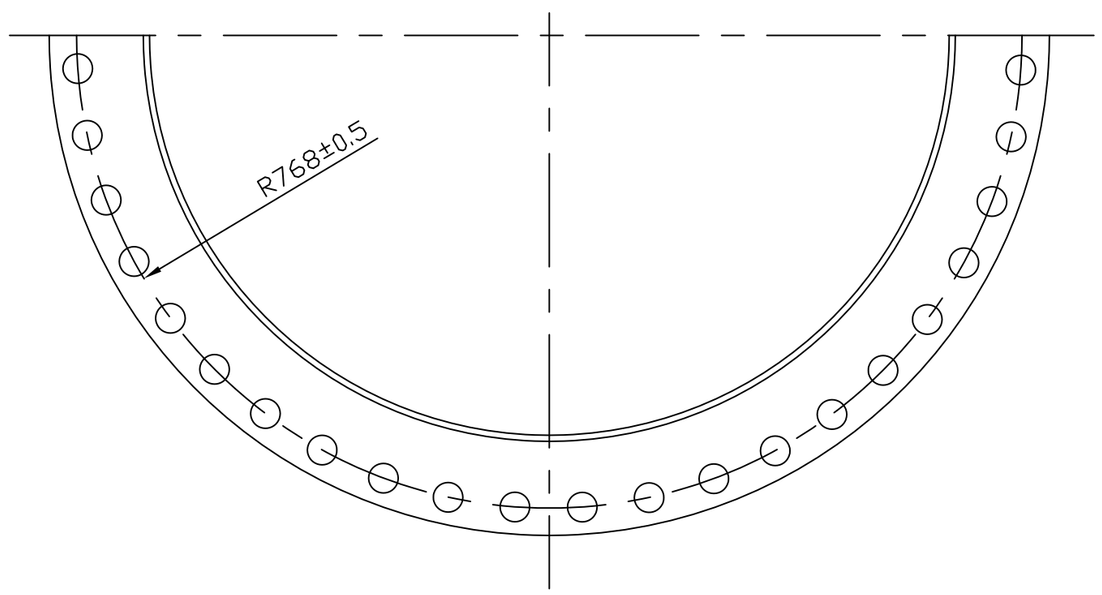

DETAIL "A"
M 1:1

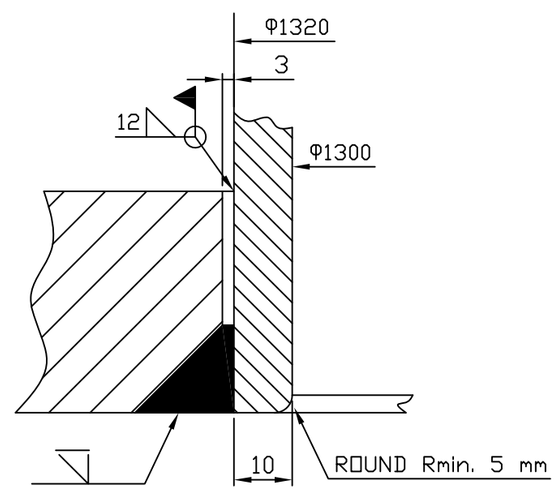

TOTAL - 730kg

POS.	DESCRIPTION	NAME	PCS	Unit	Total	MATERIAL	NOTE
2.	MTZ/12/B/HTF-------/SW/615	PIPE Φ1300	1	391	391	S355 J2	
1.	MTZ/12/B/HTF-------/SW/614	FLANGE	1	339	339	S355 J2	

Rev.	Revision Date	Created by	Checked by	Approved by	Description	Status
0	18/02/09	LONGONI	TONINELLI	SPREAFICO	RELEASED FOR CONSTRUCTION	RFC

Project
Проект

Maritza East I Power Station

ALSTOM Power Italia S.p.A.

SIGNED BY: DATE: 18/02/09

REV.....0..... AND FURTHER RELEASED FOR ERECTION/CONSTRUCTION

Company
Възложителя

Space for stamp of Municipality of Galabovo
Място за печат на Община Гълъбово

Space for further stamps
Място за допълнителни печати

Area for stamp of EQE Control OOD (ICS)
Място за печат на EQE Control ООД (Незав. надзор)

Space for stamp of authorized Bulgarian Designer
Място за печат на лицензиран български проектант

Main Contractor / Главен изпълнител
ALSTOM
Power Generation AG
Power Boiler GmbH

Partner of Main Contractor / Партньор на главния изпълнител
ALSTOM
Power Italia S.p.A.

Responsible dept. Отговорен отдел	Created by Изготвил	Checked by Проверил	Approved by Одобрил	Format Формат
STRUCTURAL	LONGONI	TONINELLI	SPREAFICO	A2
Scale Мащаб 1:10		Class. no. (e.g. KKS) Класифик. № HTF	for Company Review & Approval : За одобрение от Възложителя : NO	
Derived from Произтича от	Replaces Заменя	Doc. Type Тип на документа SW	Document Status Статус на окумента RELEASED	Sub Site No. Подобект №

Logo of Legal Owner
Официален собственик

ALSTOM
Power Italia S.p.A.

Sub Contractors Doc Number
№ на документа на подизпълнителя

Consortium Partner Document Code
Код на документа на партньора от консорциума

Title, Subtitle
Заглавие, подзаглавие

ABSORBER 12
NOZZLE
N1A N2A N3A N4A N5A N6A N7A
(N1A and N3A)

Project Doc Number
№ на проектния документ
MTZ/12/B/HTF-------/SW/613

Rev. Рев	Date Дата	Lang. Език	Sheet Страница
0	18/02/09	EN	1/4

We reserve all rights in this document and in the information contained therein. Reproduction, use or disclosure to third parties without express authority is strictly forbidden. Правата върху този документ и информацията в него са запазени. Размножаването, използването или разпространяването на трети страни без специални пълномощия е строго забранено